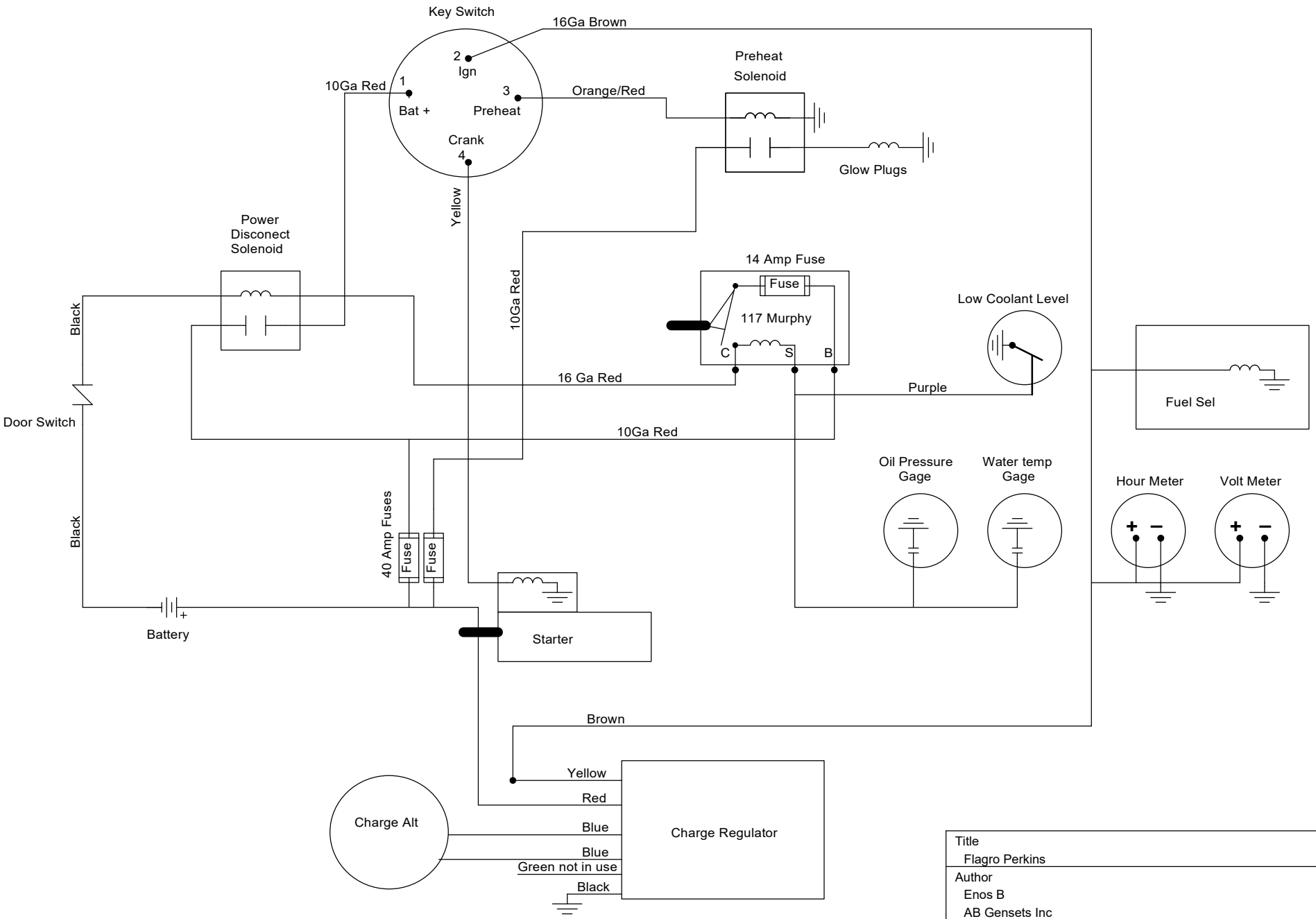

Title Flagro Perkins		
Author Enos B AB Gensets Inc		
File TinyCAD\Drawings\AB Genset\Flagro Perkins.dsn		Document
Revision 1.0	Date Oct 28 2021	Sheets 1 of 1